BESTEK

User Manual

BESTEK 300 Watts Pure Sine Wave Power Inverter

Model: MRZ3011HU

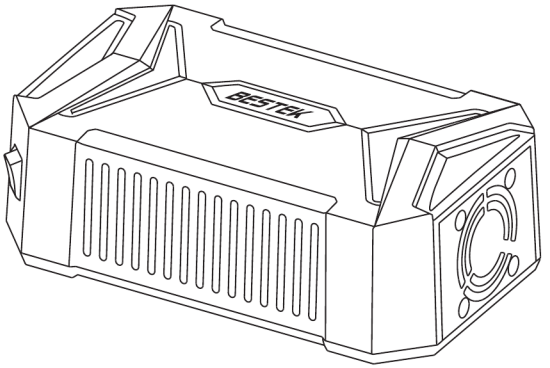

America's Leading Power Inverter Brand

- Ever wonder how to charge some kind of electronic gadget while in your motor-home, SUV or car? this inverter will supply stable power to run small electronic tools, air conditioners,microwaves, laser printers, air pumps, electronic doors, small motors and refrigerators that a modified sine wave inverter can not.
- BESTEK 300 Watts Pure Sine Wave Power Inverter converts DC to AC pure sine wave for power on the go,making it perfect for running sensitive electronics on the go.

Package Contents

- BESTEK 300Watts Power Inverter
- User Manual

Advantages of Pure Sine Wave Inverter

- Output voltage wave form is pure sine wave with very low harmonic distortion and clean power like utility-supplied electricity.
- Inductive loads like microwave ovens and motors run faster, quieter and cooler.
- Reduces audible and electrical noise in fans, fluorescent lights, audio amplifiers, TV, Game consoles, Fax, and answering machines.
- Prevents crashes in computers, weird print out, and glitches and noise in monitors.
- BESTEK Pure Sine Wave Inverter powers the following devices that will normally not work with modified sine
- Laser printers, photocopiers, magneto-optical hard drives
- Certain laptop computers (you should check with your manufacturer)
- Some fluorescent lights with electronic ballasts
- Power tools employing "solid state" power or variable speed control
- Some battery chargers for cordless tools
- Some new furnaces and pellet stoves with microprocessor control
- Digital clocks with radios
- Sewing machines with speed/microprocessor control
- X-10 home automation system
- Medical equipment such as oxygen concentrators

Features

- DC to AC Power: provides 300 watts continuous DC to AC pure sine wave and 750 w peak output power to charge multiple electronic devices on the go
- Smart Charging: 2 USB charging ports with Smart IC technology automatically detect your devices to deliver its fastest charge speed up to 2.4 amps per port/4.2 amps max
- Compact Design: convenient with no additional wires or assembly required. Directly plug in any 12V cigarette lighter socket
- Advanced Protection: built-in 40 amp fuse and auto-shutdown keep your appliance and car from overheating, overloading, low load, short circuit, low voltage and over voltage

Vehicle Power Inverters Compatible with Tesla

- The input voltage for product is 11-17V, perfectly suitable for the 16V cigarette lighter socket of Tesla vehicles.

Specifications

Input Voltage Range	DC 11V~17V
AC Output	AC100-120V 60Hz
Output Watts	300W Rated (750W peak)
USB Rated Output	5V⎓2.4A Each Total: 24W Max
Energy Conversion	＞80%
Output Wave Form	Pure Sine Wave
Over Voltage Shutdown	DC 17V~18V
Low Voltage Shutdown	DC 9.5V~10.5V

Identification of parts

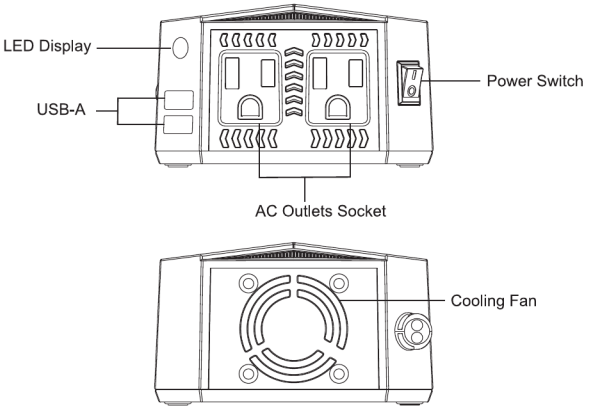

Caution

- The ON / OFF switch turns the control circuit in the inverter ON and OFF. It does not disconnect power from the inverter.
- When the switch is in the OFF position, the inverter draws no current from the battery.
- When the switch is in the ON position, but with no load, the inverter draws power from the battery.
- This product has a built-in fuse, please contact the professional for operation when you need to replace it.

LED light status

No light from LED	Poor contact
Green	Power on and in operation
Red	Overload Protection Power off and unplug devices, make sure the input /output are within the allowable range before power on again. Green light on constantly when it's running normally.

Warranty & Service Information

Our company provides customers with a warranty of 18 months from the date of purchase. Whether you need technical advice, repairs or original replacement parts and all other after-sales services, please contact us at customers.us@bestek.com. We will reply to you as soon as possible.